TRUMPF

TruTool TKA 1500 (1A1)

	订货号	备件
	No. D'ORDINE	PEZZO DI RICAMBIO
	NO. DE REF.	PIEZA DE RECAMBIO
	NO. DE REF.	PIECE DE RECHANGE
	ORDER NO.	SPARE PART
NO	BEST.-NR.	ERSATZTEIL
1	0099123	
2	2423971	
3	2425118	
4	0754034	
5	2336034	
6	0145054	
7	2369354	
8	0116028	
9	2368345	
10	2304231	
11	2304219	
12	2384088	
13	2069442	
14	0021580	
15	2296830	
16	2369023	
17	2368850	
18	2288923	
19	2417337	
20	2500309	
21	0102172	
22	2455140	
23	2417338	
24	2393297	
25	2060017	
26	2500713	
27	2336035	
28	0016020	
29	2500310	

30	2401270	30°
	2401267	45°
	2401268	60°
	2401269	Radius 2-4
31	2396712	St
	0353387	Radius
32	2420322	St
	2435949	Radius 2
	2435950	Radius 3
	2435971	Radius 4
33	2496533	30°
	2495000	45°
	2496534	60°
	2496535	Radius 2-4
34	0021440	
35	0027758	
36	2360536	
37	2494999	
38	0140852	
39	2423975	30°
	2423973	45°
	2423976	60°
	2423977	Radius 2-4
40	2388652	
41	2388651	
42	2434488	
43	2386900	D 230V 50/60Hz
	2386900	CH 230V 50/60Hz
	2386971	GB 110V 50Hz
	2386972	USA 120V 50/60Hz
	2500063	KR 220V 60Hz
44	2391342	D 230V 50/60Hz
	2391390	CH 230V 50/60Hz
	2391403	GB 110V 50Hz
	2391404	USA 120V 50/60Hz
	2500064	KR 220V 60Hz

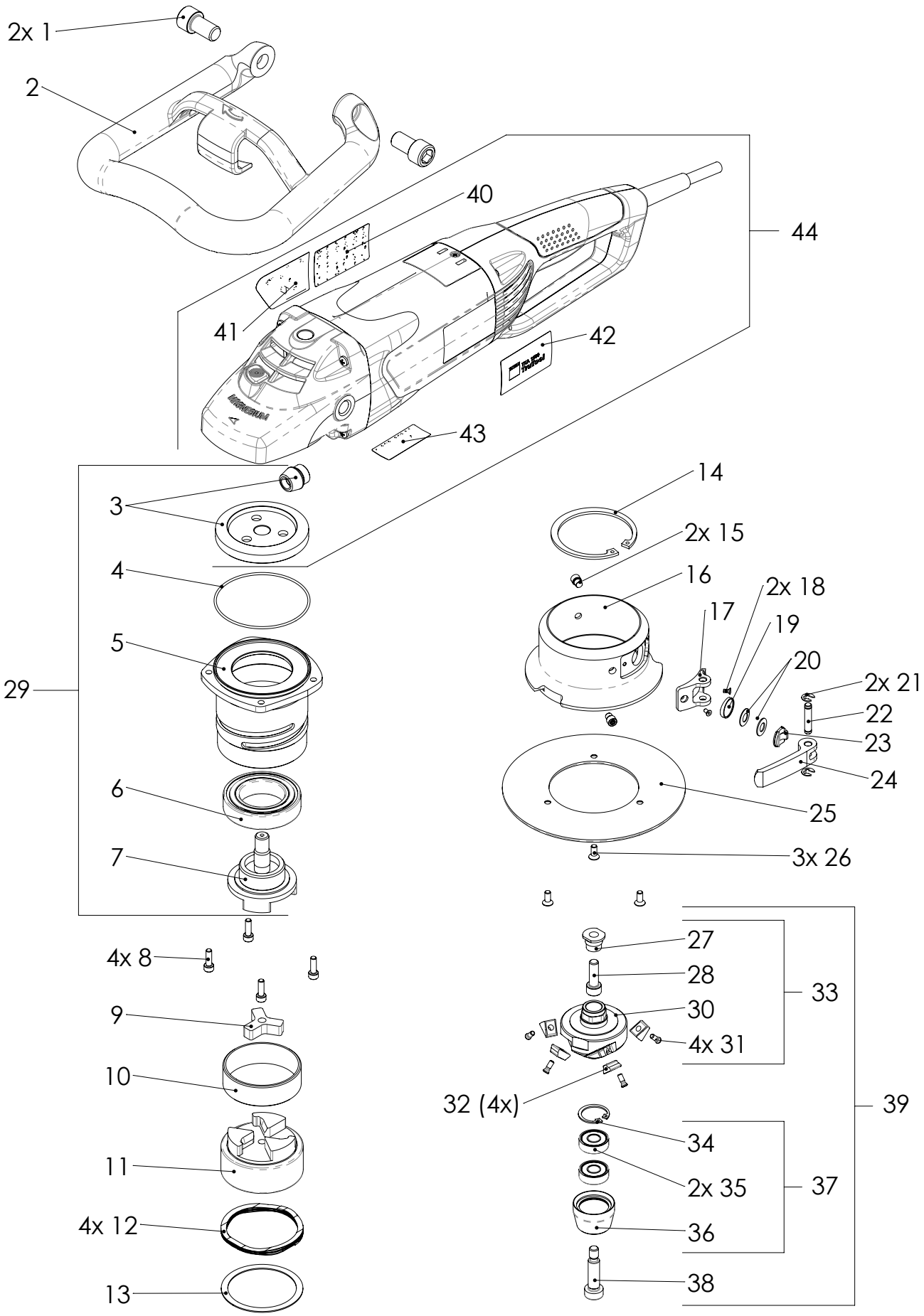
2x 1
2
40
44
41
42
43
3
4
5
29
6
7
14
2x 15
16
2x 18
17
19
20
2x 21
22
23
24
25
3x 26
4x 8
9
10
11
4x 12
13
27
28
30
4x 31
33
32 (4x)
39
34
2x 35
37
36
38